MONGEY COMMUNICATIONS

Specifications.

M13: 13.5m² Double Sided Mobile LED Screen

M13 DOUBLE SIDED

Screen

Display Size	13.5m² Double Sided
Display Dimension	4.608m x 2.880m Both Sides
Picture Format	16:9 Full HD
Pixel Pitch	8mm actual – 4mm virtual
Brightness	6,500 nits
Viewing Angle	140 (±70) H / 140 V
Min, rotation space from trailer body (each side)	2.400m
Screen Rotation	360°
Input Signals	DVI / SDI / HD-SDI / HDMI

Trailer

Length	6.389m
Width	2.075m
Width (outriggers extended)	3.200m
Height (lowered)	2.722m
Height (raised)	7.544m
Weight	3,840kgs

Power: Built in Generator

Power consumption max	18kVa
External power connector	32 A 3 phase

Safety: Our Mobile LED Screen

- Approved to be used up to wind force 7
- Are operated by highly experienced and trained technicians to ensure a quality service
- Has multiple safety lock systems for the hydraulic system to ensure safety
- Are TUV compliant

Unit Y, M7 Business Park, Newhall, Naas, Co Kildare W91 HH02 | T: +353 45 897 450 | E: info@mongey.ie | mongey.ie

MONGEY COMMUNICATIONS

Specifications.

M13: 13.5m² Double Sided Mobile LED Screen

M13 DOUBLE SIDED
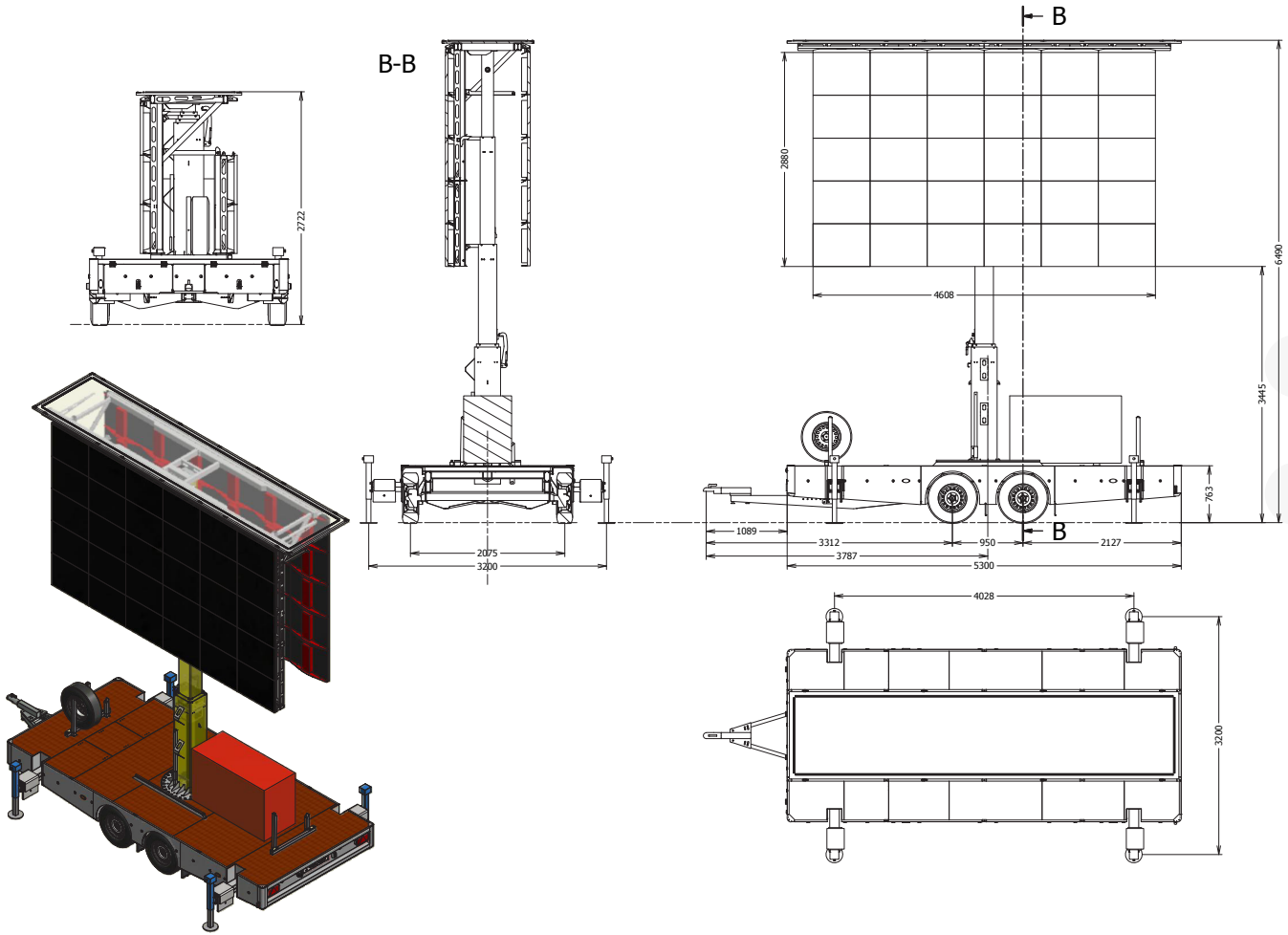
Technical Drawing